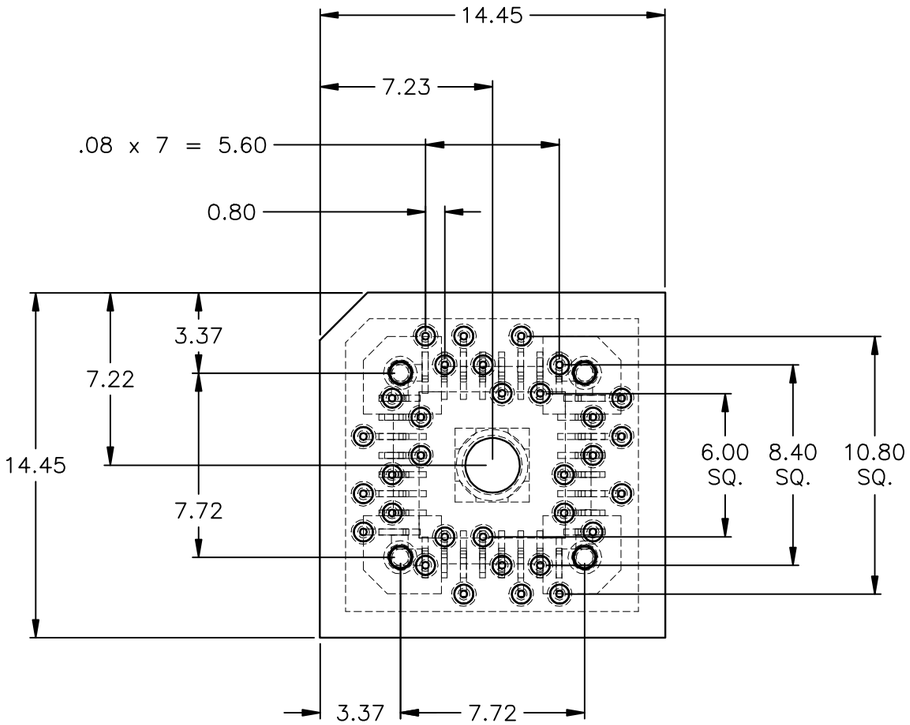

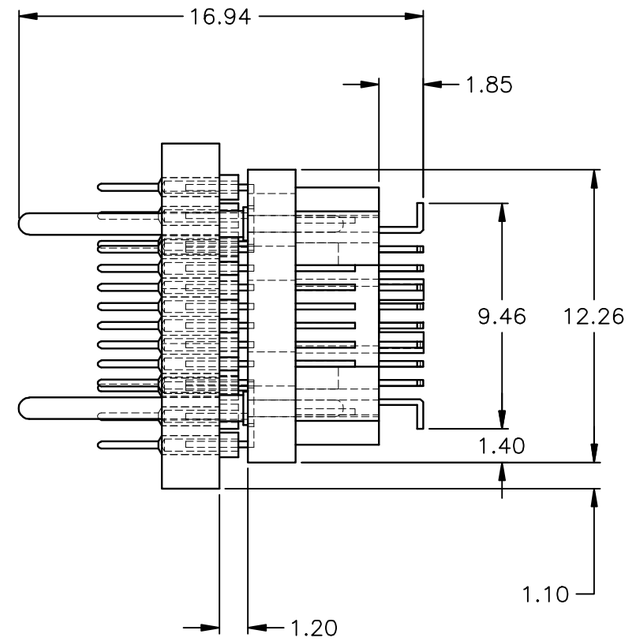

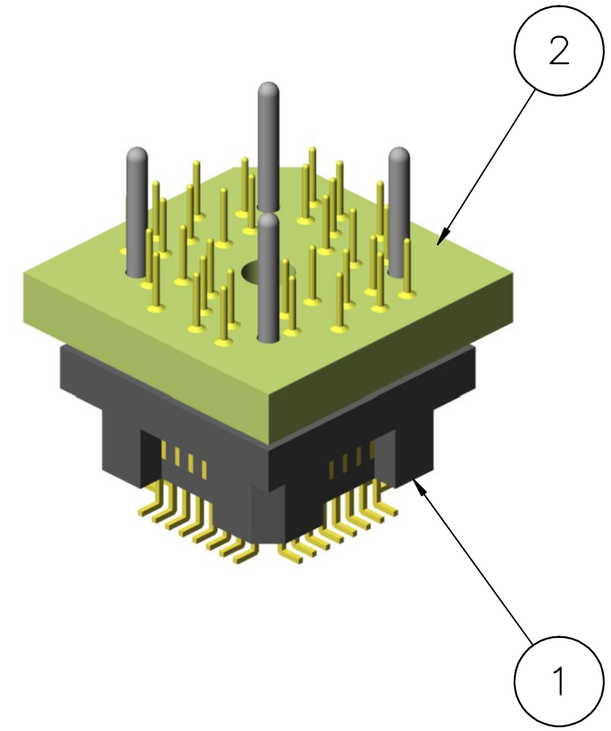

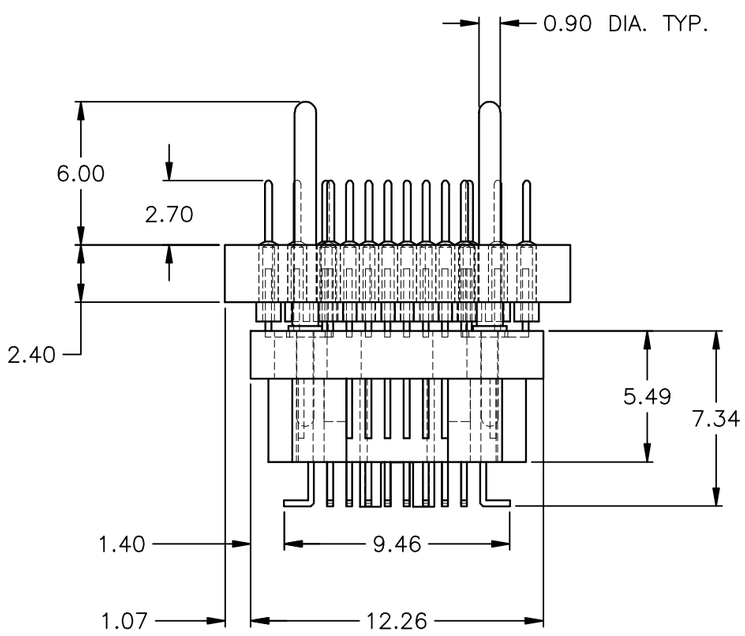

ITEM	QTY	NAME	MATERIAL	DESCRIPTION
2	1	TQ–Socket	ADAPTERS.COM	#000–2655
1	1	TQ–Pack	ADAPTERS.COM	#000–4426

Parts List

FILE NAME LFTQSAT.dwg

CONTRACT NO –

DRAWN 11/05/07 CJW

CHECK

APPR. 9/24/2010 = WEB

ISSUED

NOTE:
DIMENSIONS ARE IN MILLIMETERS
DO NOT SCALE DRAWING

freescale™ semiconductor

28125 Cabot Drive, Suite 100
Novi MI 48377

QFP SURFACE MOUNT TARGET INTERFACE SET
32 Pin 0.8mm (LEAD FREE)

SIZE	FSCM NO	DWG NO	REV
B	–	LFTQSAT	
SCALE 4:1		WEIGHT	SHEET 1 of 1