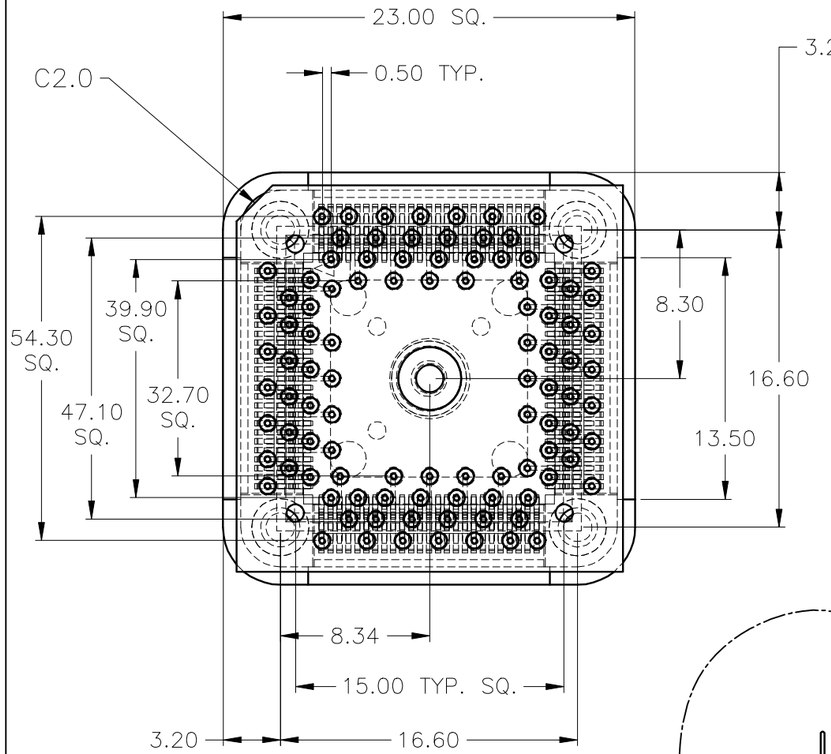

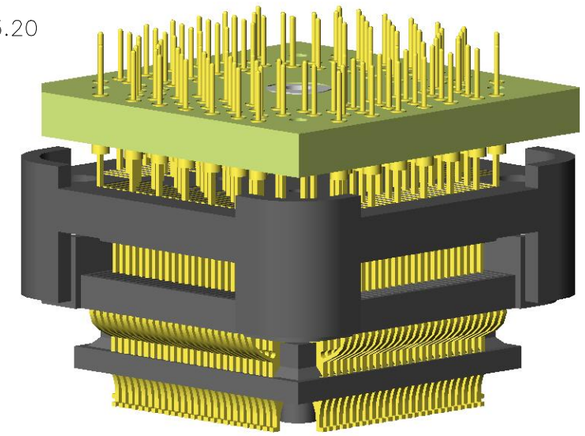

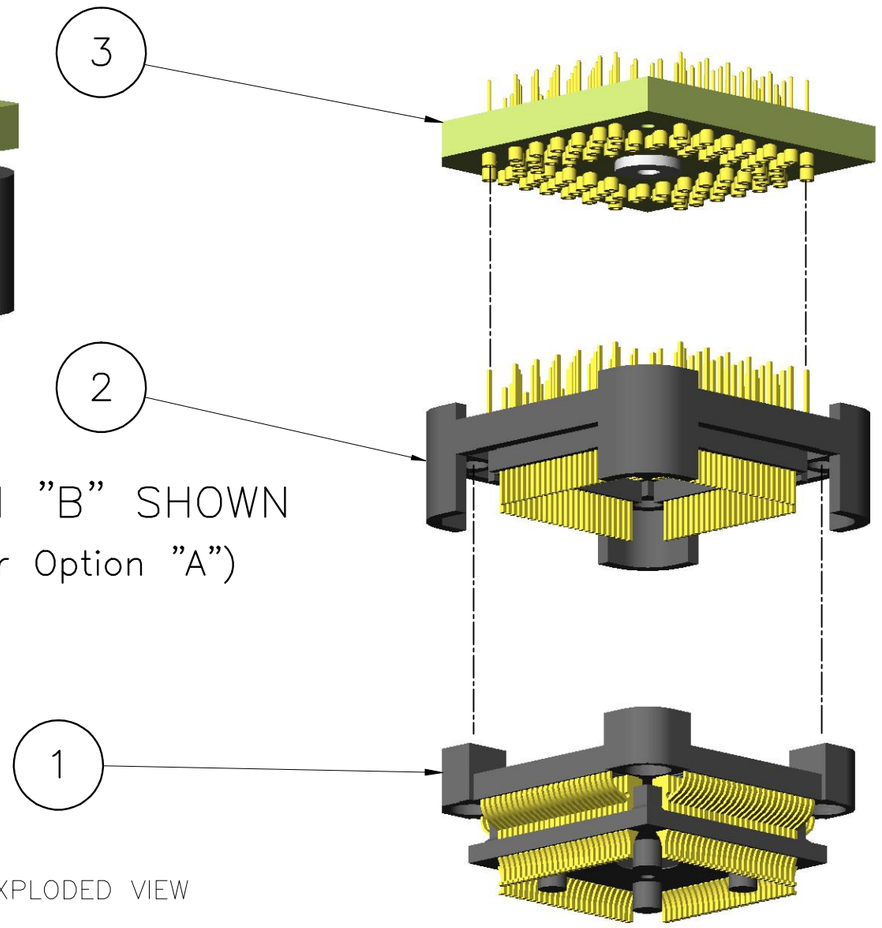

ASSEMBLY OPTION "B" SHOWN

(See Sheet #1 for Option "A")

EXPLODED VIEW

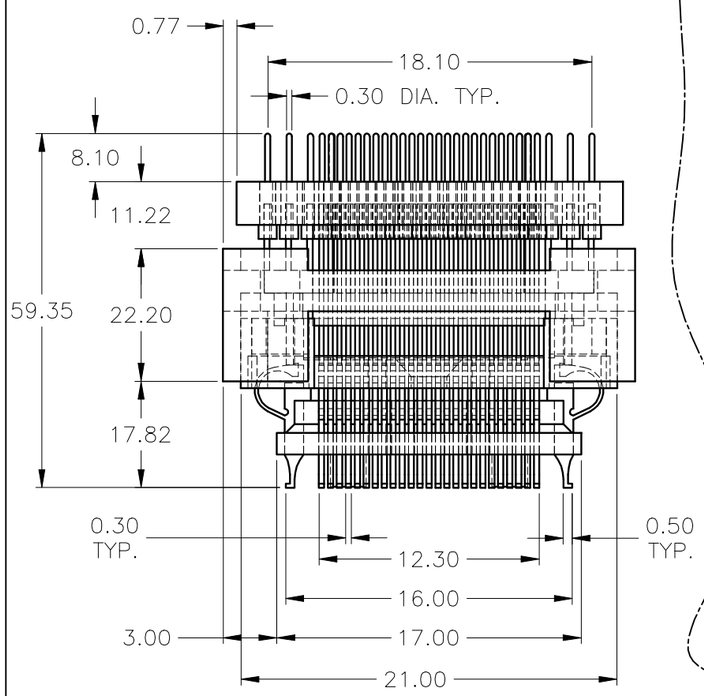

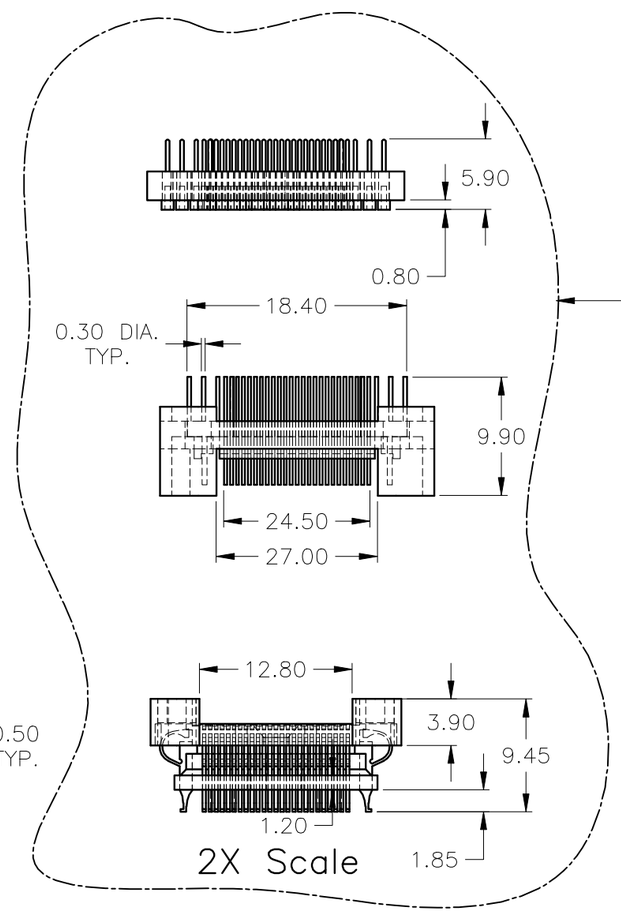

ITEM	QTY	NAME	MATERIAL	DESCRIPTION
3	1	TQ Pack	Adapters.com	000–2944
2	1	YQ Pack	Adapters.com	000–2227
1	1	NQ Pack	Adapters.com	000–2225

Parts List

FILE NAME LFTHNYHT.DWG

CONTRACT NO –

DRAWN 06/24/08 MJL

CHECK 07/14/08 CJW

APPR. 09/13/2010 = WEB

ISSUED

NOTE:
DIMENSIONS ARE IN MILLIMETERS
DO NOT SCALE DRAWING

freescale™ semiconductor

28125 Cabot Drive, Suite 100
Novi MI 48377

QFP Target Interface Adapter and Surface Mount Socket Set
100 PIN 0.5mm Lead Free (Assembly Option "B")

SIZE	FSCM NO	DWG NO	REV
B	–	LFTHNYHT	
SCALE 3:1		WEIGHT	SHEET 2 of 2