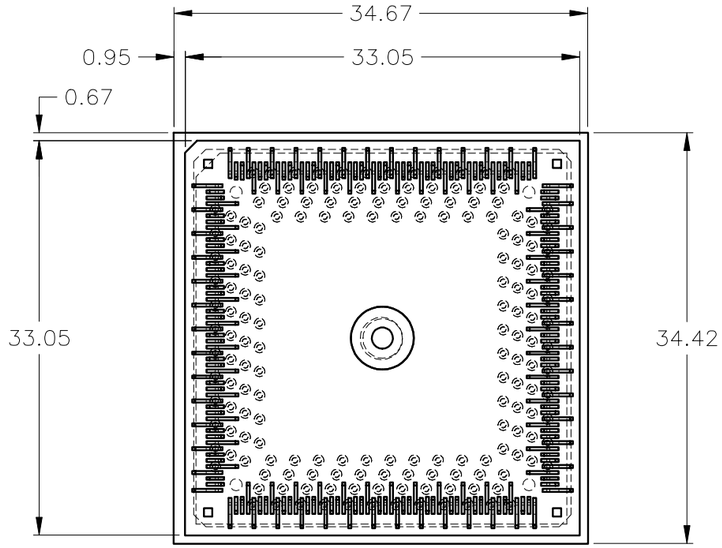

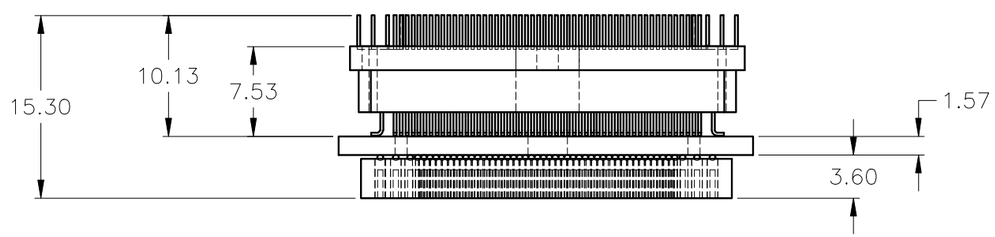

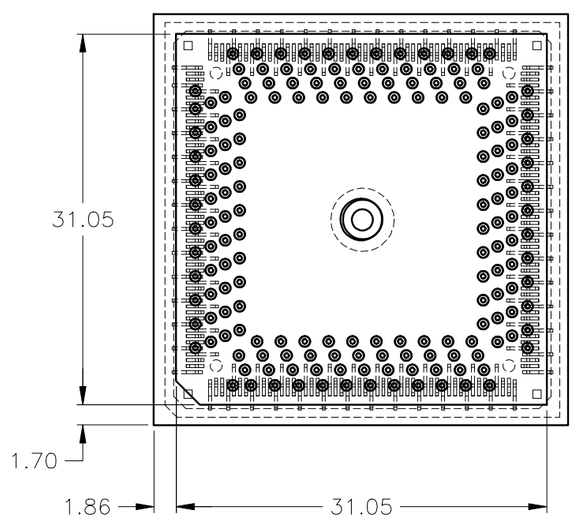

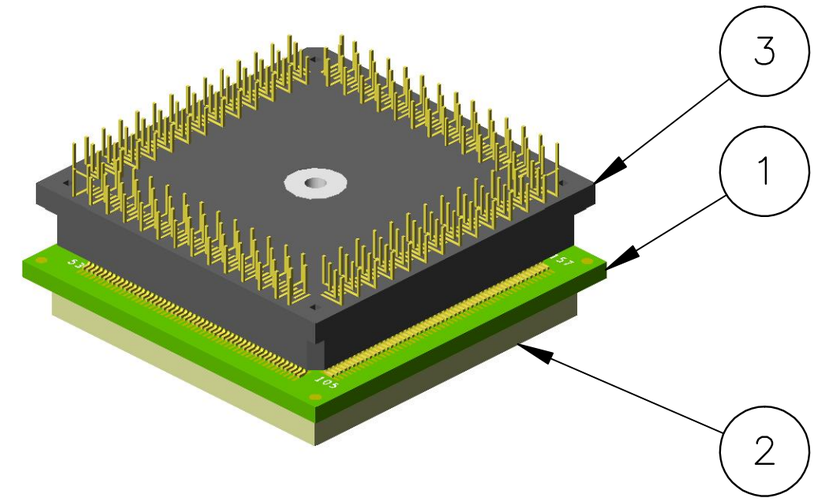

ITEM	QTY	NAME	MATERIAL	DESCRIPTION
3	1	TQ PACK	TOKYO ELETECH CORP.	TQPACK208SD
2	1	TQ SOCKET	ADAPTERS.COM	000-3181-81
1	1	PCB	Freescale Semi	CDC2165

Parts List

FILE NAME LFTAJ46CNM2T.dwg

CONTRACT NO —

DRAWN 12/21/2011 CJW

CHECK

APPR.

ISSUED

NOTE:
DIMENSIONS ARE IN MILLIMETERS
DO NOT SCALE DRAWING

freescale™ semiconductor

28125 Cobot Drive, Suite 100
Novi MI 48377

TARGET ADAPTER BOARD

for MPC5646A Family. 176 Pin LQFP

SIZE	FSCM NO	DWG NO	REV
B	—	LFTAJ46CNM2T	
SCALE 2:1		WEIGHT	SHEET 1 of 1